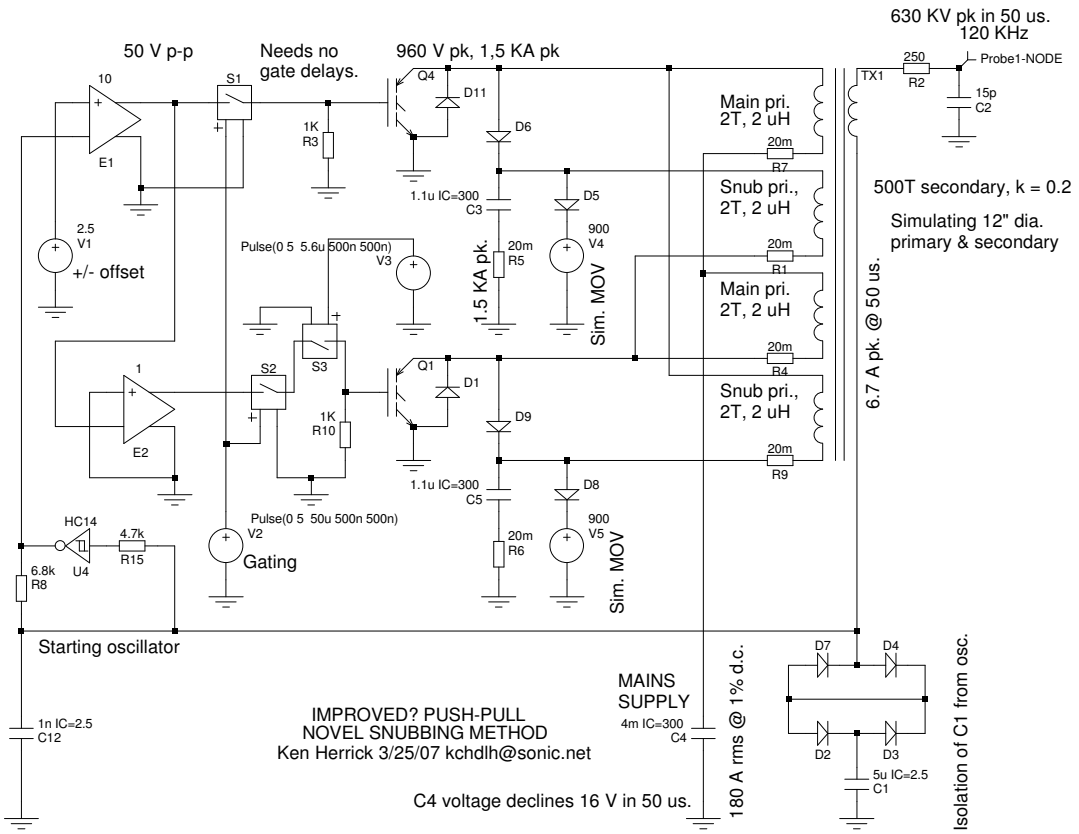

C:\Program Files\SIMetrixIntro45\Work\Single res_sec-fb_p-p4c.sxsch - Sunday, March 25, 2007

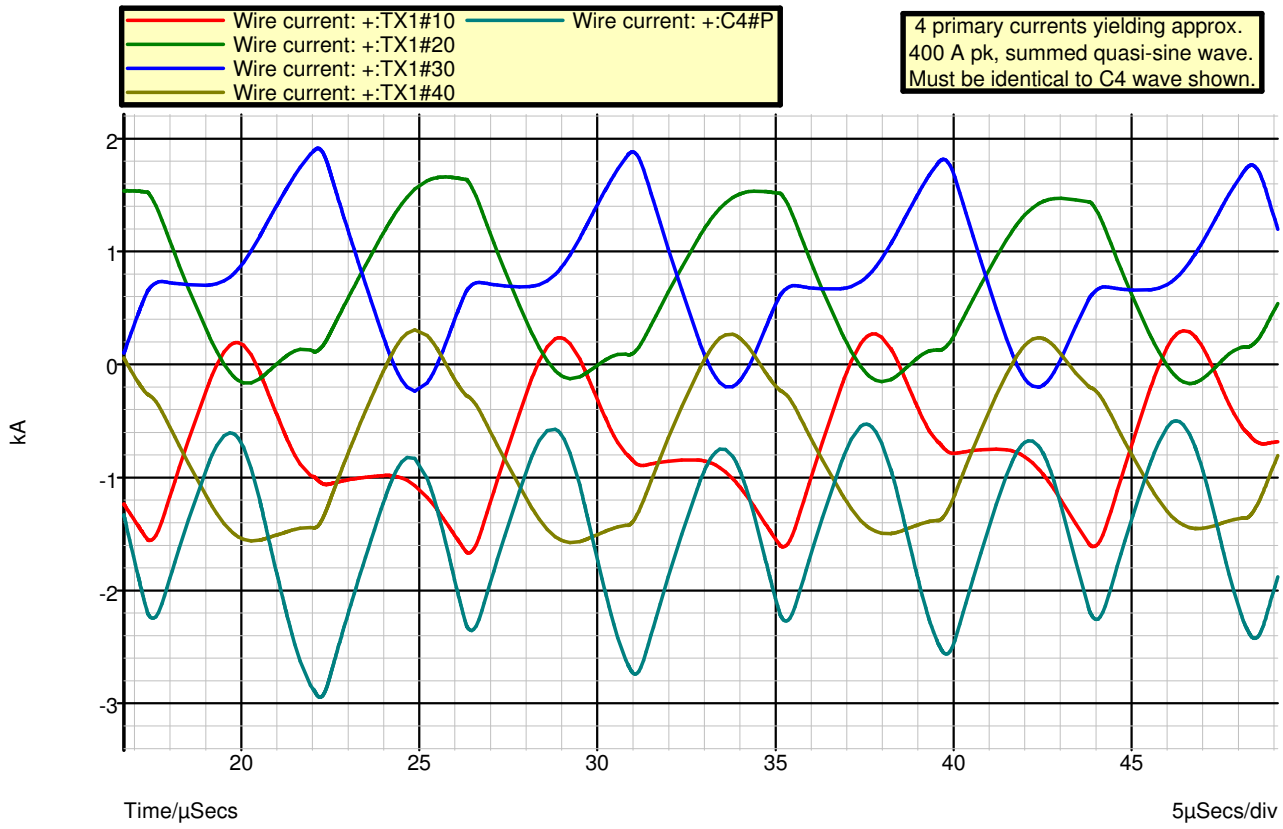

tran9 (C:\Program Files\SIMetrixIntro45\Work\Single res_sec-fb_p-p4c.sxsch) - Sunday, March 25, 2007